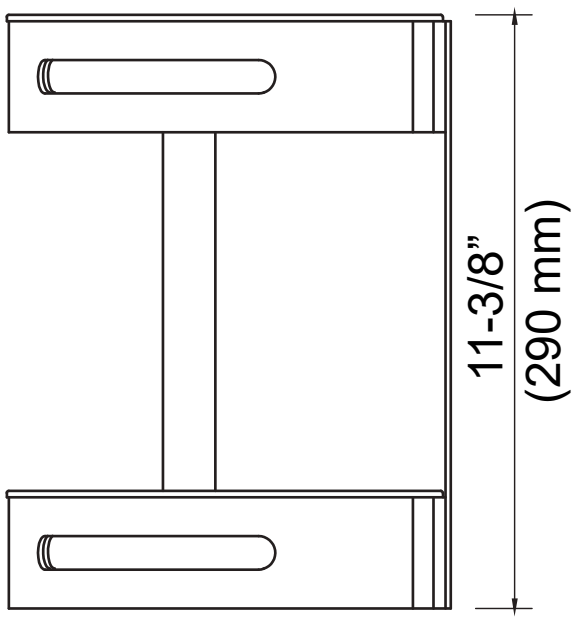
11-3/8”
(290 mm)

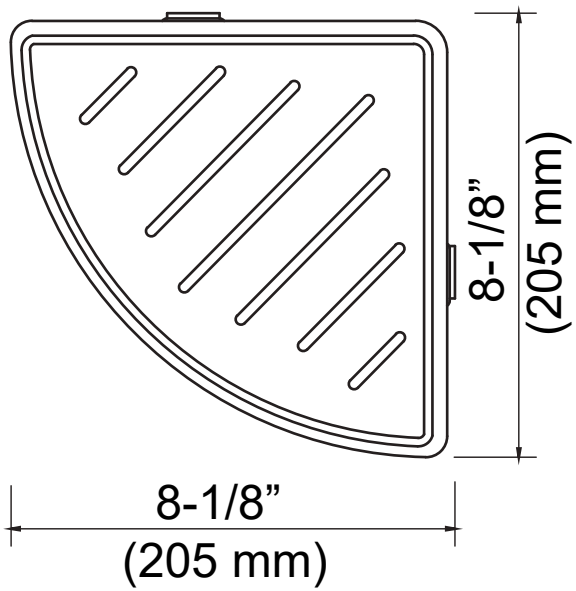
8-1/8”
(205 mm)
8-1/8”
(205 mm)